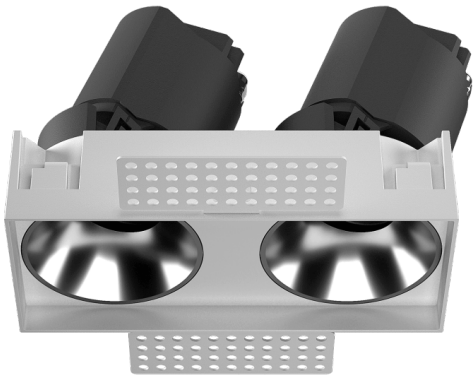

ZENITH IP65SX2 Trimless

Item code	**86.D287.0331.02**
Product type	**Indoor**
Category	**Downlights**
Family	**ZENITH**
Subfamily	**ZENITH IP65SX2 Trimless**
Pictograms	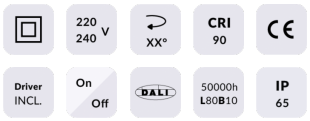

Dimensions	
Product dimensions (mm)	**116X55xH75mm**

Scheme

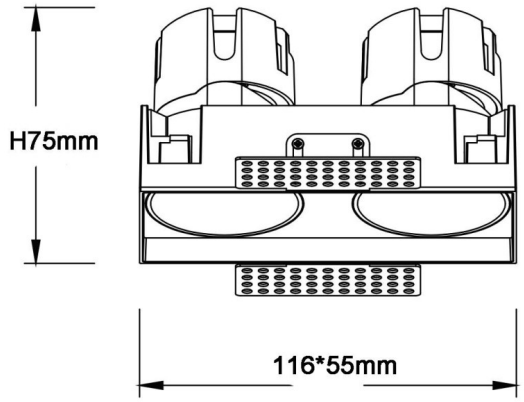

Product	
Real power (W)	**2X7**
Real luminous flux (Lm)	**2X560**
Luminous efficiency (Lm/W)	**80**
Beam angle (º)	**36**
Life time (h)	**50000 h L80B10**
IP	**65**
U. G. R	**19**
Control gear	**ON/OFF**
Colour temperature (K)	**3000**
Colour consistency (SDCM)	**SDCM3**
CRI	**90**

Photometry

